MF2207

Size:	60”x 28 1/2”x 38 1/2”
Weight:	235 lbs.
Features:	Arched back
Seat:	1/4” x 1 1/2” hot rolled steel
Arms/Legs:	5/8”x 2” hot rolled steel
Anchoring:	Optional per request.

Color Selection:

Black - Green - Yellow
Beige - Brown - Red - Gray
Burgundy - Blue - Federal Green

Custom colors are available upon request

Metal Form Flat Steel Specifications

Finish Specification

Metal Armor Coating Performance Properties
Thermoplastic functional polyethylene copolymer-based coating
Coverage: 20mils minimum

Flexibility: 1/8”, no cracks	ASTM D 533
Adhesion: >1000 psi/(5A)	ASTM D 4541/ASTM D 3359 Scored and unscored/no peeling or removal
Impact Resistance: >384 in/lbs	ASTM D 2794
Gloss: At 60 degrees – 35-60	ASTM D 523
Delta Shift: 1.77	1400 MJUV = 5 yrs (color tested: Red)
Hardness: Shore D-48	ASTM 2240
Taber Abrasion: 90 mg loss - CS10 wheel 100 mg loss – CS17 wheel	ASTM D 4060
Salt Spray Resistance: >4000 hrs	ASTM B 117
Humidity Resistance: No blistering or loss of Gloss after 1000 hrs	ASTM D 2247
Smoke Development: 10 Flame spread index 10 Smoke developed index	ASTM E 84
Chip Resistance: 8A	ASTM D 3170

Environmental
VOC Content: 0, 100% solids

Special Approvals
FDA approved for direct food contact and has USDA compliance for use within the product zone applications.

Health
NFPA Classification:
Flammability: 1
Health: 0
Reactivity: 0

SPECIFICATIONS

MF 2207 Bench

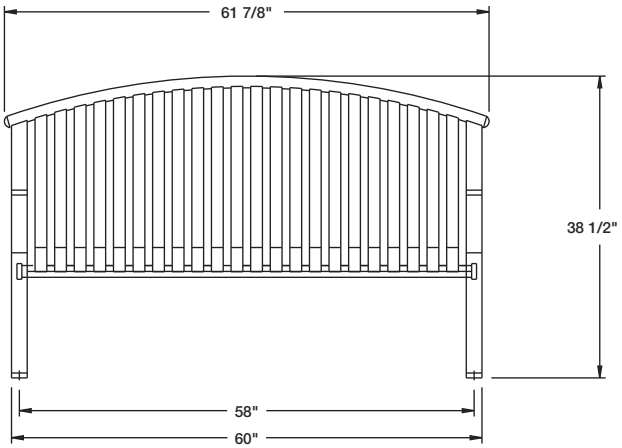

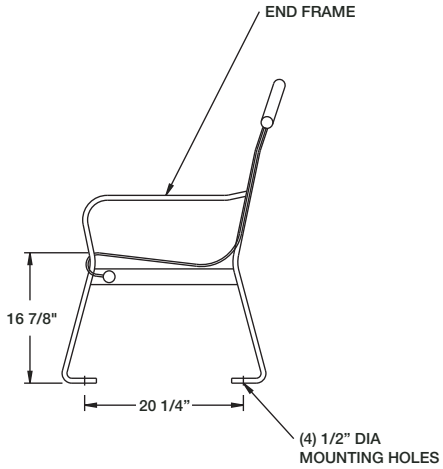

ANCHOR DETAIL

To install Rawl-Bolt™ one piece heavy duty anchors, follow simple instructions below:

1. With fixtures in place, drill hole of same nominal diameter as the Rawl-Bolt.™

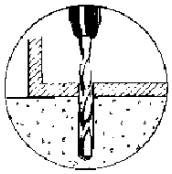

2. Remove tag from assembled anchor. Insert anchor through hole in fixture.

3. Tap Rawl-Bolt™ into hole until washer and bolt head are seated against fixture.

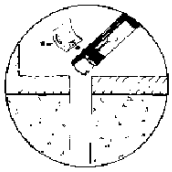

4. Tighten with wrench.

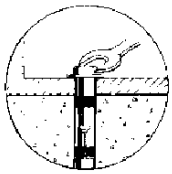

1.1 SUMMARY

A. Section includes: Furnish Metal-Form benches on drawings or specified herein.

1.2 REFERENCES

A. American Society for Testing & Materials

1. ASTM-D533 ASTM-D4541 ASTM-D3359 ASTM-2794
   ASTM-D523 ASTM-4060 ASTM-B117 ASTM-D2247
   ASTM-E84 ASTM-D3170 ASTM-A569 ASTM-B6
   ASTM G26 ASTM-A569/A569M

1.3 SUBMITTALS

A. Submit product data, shop drawings and samples.

1. Product Data: Manufacturer's specifications and technical data edited specifically for proposed product, including the following specific information:
   a. Detailed specification of construction fabrication.
   b. Manufacturer's installation instructions
   c. Product warranty

B. Shop Drawings: Indicate pertinent dimensions, general construction, component connections, anchoring methods, hardware and installation procedures.

C. Samples as requested by Architect.

1.4 QUALITY ASSURANCE

A. Qualifications of Manufacturer: Manufacturer to be prequalified by specifier prior to bidding. Failure to comply will result in disqualification of bid. Manufacturer to have at least three years experience in the manufacture of thermo plastic coated steel site furnishings field proven for at least three years.

B. Warranty: 5 Years - Metal Armor Coated Products

1.5 MANUFACTURERS

A. Acceptable manufacturer for thermo plastic coated steel site furnishings to be known as:
Wausau Tile, Inc.
PO Box 1520
Wausau, WI 54402-1520
(800) 388-8728 FAX (715) 355-4627

B. Clarification Note: Drawings and installation specifications are based on manufacturers proprietary literature from Wausau Tile, Inc., Metal-Form Division. Other manufacturers shall comply with minimum levels of material and detailing indicated on drawings or specified herein.